EN

SIMARINE®

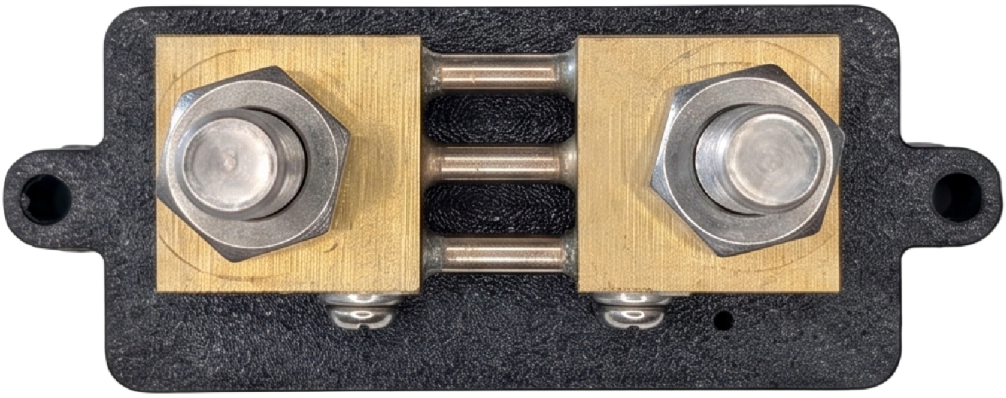

SL301

USER MANUAL

V1.0

de stille boot

info@destilleboot.nl - (0515) 444 428 - It Butlan 9 8621 DV Heeg, The Netherlands

1. Introduction 3
2. EU Declaration of conformity 3
3. Safety 4
4. Overview 5
5. Installation 6
5.1 Cables 6
5.1.1 Power cable 6
6. Connecting 7
6.1 Wiring Diagram 8
7. Troubleshooting 8
7.1 Negative curent values 8
8. Technical specifications SL301..... 9

1. Introduction

Simarine's high precision SL301 active digital shunt measures voltage, current, and temperature of the battery or battery bank.

It can be used for monitoring current draw of heavy consumers (inverters, bow and stern thrusters, anchor winches) and current generators (shore power chargers and solar panels). Additionally, it allows monitoring one tank for fuel, fresh and gray water.

2. EU Declaration of conformity

CE

MANUFACTURER: SIMARINE d.o.o.
ADDRESS: Ulica škofa Maksimilijana Držecnika 6, SI-2000 Maribor, Slovenia, EU
TELEPHONE NUMBER: +386 40 277 107
E-MAIL ADDRESS: info@simarine.net

Declares that the following product:
PRODUCT TYPE: SL301

Is in conformity with the relevant European union harmonization legislation:

EMC Directive 2014/30/EU
(as per harmonized standards EN EIC 61000-6-1:2023, etc.)

Low Voltage Directive 2014/35/EU
(as per harmonized standards EN EIC 62368-1:2023)

Radio Equipment Directive 2014/53/EU
(as per harmonized standards ETSI EN 300 328, ETSI EN 301 489-1, ETSI EN 301 489-17 and EN 18031)

UNECE Regulation No. 10 (ECE-R10)
(as per the latest applicable version, e.g., ECE-R10, Rev.6/Amend.5

RoHS Directive 2011/65/EU and amendments
(as per harmonized standards EN EIC 63000:2018.)

3. Safety

Only qualified electricians with proper safety equipment should make installation of Simarine electronics. When working with batteries, you should wear protective clothing and eye protection.

CAUTION: Batteries contain acid, a corrosive, colorless liquid that can burn your eyes, skin, and clothing. If the acid comes into contact with eyes or skin, wash out with lukewarm water and immediately seek medical support.

CAUTION: Do NOT connect anything to a damaged battery. It could heat up, catch fire, or explode.

CAUTION: Lead-acid batteries can generate explosive gases during operation. Never smoke, allow flames, or sparks near the battery. Make sure to keep sufficient ventilation around the battery.

4. Overview

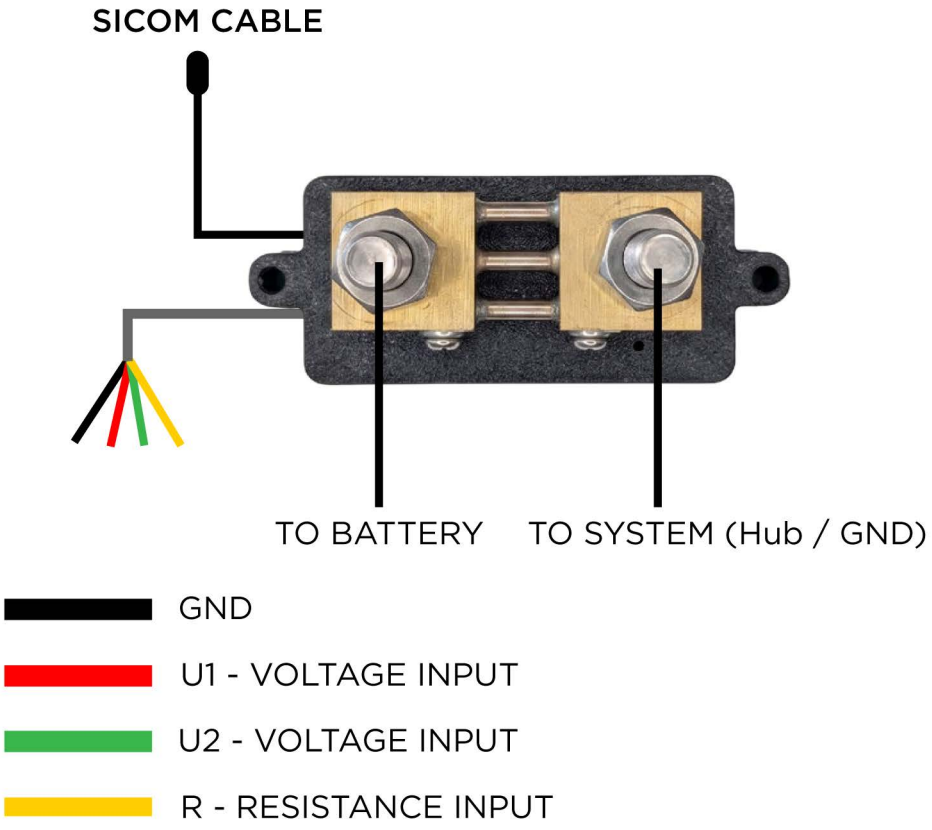
SICOM CABLE
TO BATTERY
TO SYSTEM (Hub / GND)
GND
U1 - VOLTAGE INPUT
U2 - VOLTAGE INPUT
R - RESISTANCE INPUT

5. Installation

CAUTION: Install the shunt module in a clean and dry place protected from accidental spilling of liquids.

- You can fix the shunt with the supplied screws using two holes on the bottom of the casing.
- Connect all cables.

5.1 Cables

Minimum power cable cross-section requirement at maximal temperature of insulation 70°C (160°F).

CAUTION: Failure to observe the required cable cross-sections can damage the shunt, wiring, or cause a fire.

6. Connecting

For proper function of the Simarine SL301 shunt **it is necessary to take the following steps**:

1. For safety reasons, disconnect the battery/battery bank plus and minus terminals.

2. Connect the shunt to the Simarine PICO LITE via the integrated SiCOM cable.

3. Connect shunt voltage U1 input to a battery + terminal.

4. Connect the battery/battery bank minus shunt IN terminal.

5. Connect all consumers and charging sources to the OUT terminal on the shunt.

Each correctly connected shunt needs to be configured. This can easily be done with the PICO Lite unit. The configuration process is described in the PICO Lite manual.

- The PICO Lite manual & other user manuals: https://simarine.net/support/

It is recommended that the shunt is installed in the negative line.

CAUTION: After connecting the shunt, make sure all connections between cables and shunt are secured. Loose connections may cause sparks, heating and even a **fire**. They may also damage the shunt.

6.1 Wiring Diagram

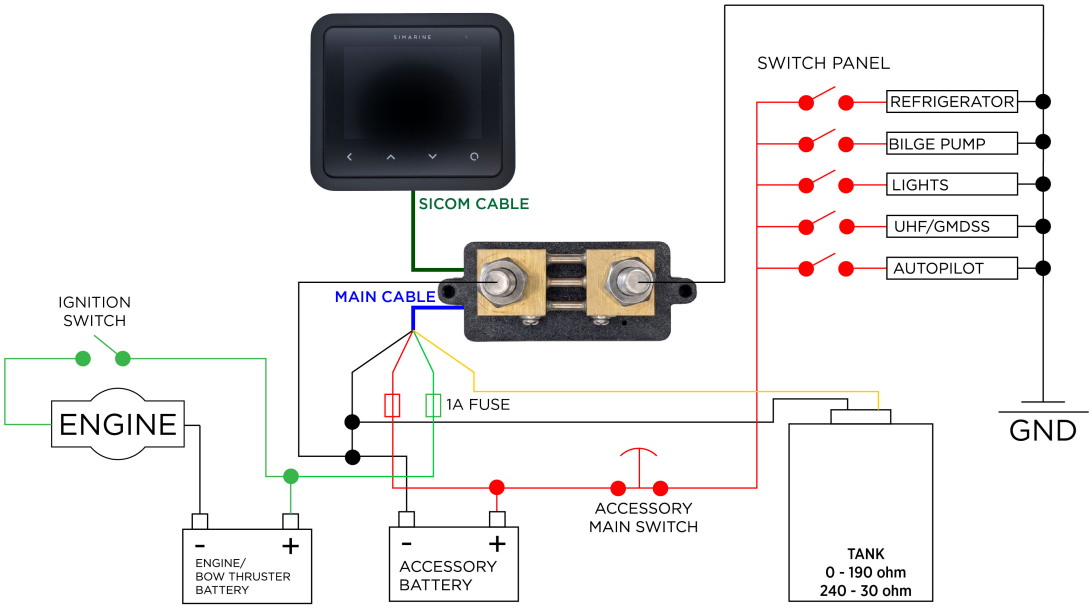

7. Troubleshooting

Before contacting support, please check the following

7.1 Negative current values

If PICO is showing the wrong sign for the current value, check if the shunt is correctly installed. This means the battery/battery bank minus (optionally plus) terminal is connected to the IN terminal on the shunt. If this is not the case, you can **reinstall** the shunt or simply **switch** the IN and OUT terminal via the shunt configuration on the PICO unit.

8. Technical specifications SL301

SC303	
Operating	
Voltage range	6 - 35V
Temperature range	-20°C – 70°C (-4°F – 158°F)
Power consumption at 12V	
Operating	1.5 mA
Current measuring range	0.01 - 300A
Accuracy	± 1%
Resolution	0.01A
Sampling rate	100ms
Maximal current	
Continuous	300A
Peak current (<5min)	400A
Peak current (<1min)	700A
Voltage drop at 300A	37,5mV
Maximal voltage on terminals	35V
Voltage inputs (U1, U2)	2
Range	0 - 35V
Accuracy	± 0.3%
Resolution	1mV
Sampling rate	100ms
Resistance inputs (R1)	1
Range	0 Ohm–65 kOhm
Accuracy	±3%
Temperature sensor – NTC 10k	
Range	From –13°C to +80°C
Accuracy (from –10 to +60°C, from 14 to 140°F)	± 3,0%
Communication	SiCOM
Installation and dimensions	
Dimensions	100 x 40 x 54mm
	3.94 x 1.57 x 2.13 in
Battery connection	M10 bolts