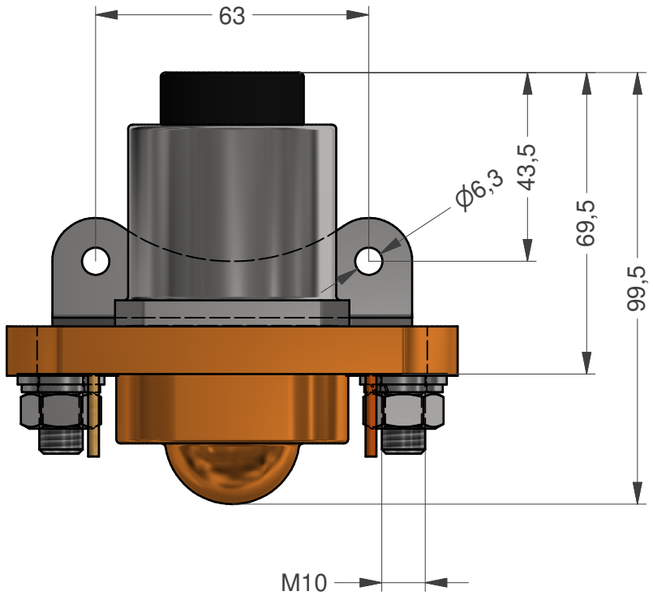

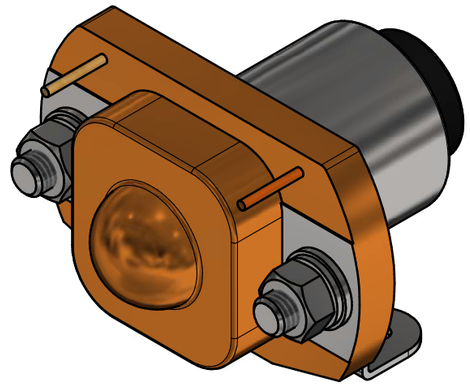

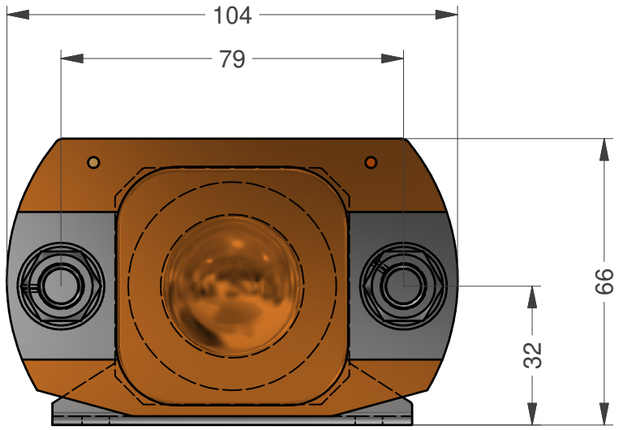

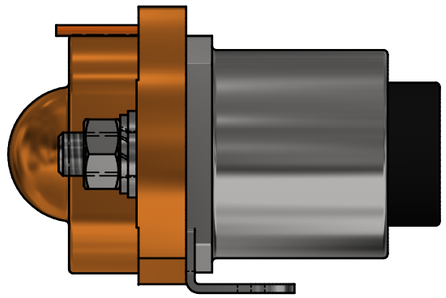

waterworld
the electric drive

Relais 24V 400A

de stille boot

De Stille Boot - It Butlan 9 - 8621 DV Heeg - The Netherlands
t. +31-515-202050 - e. waterworld@theelectricdrive.com - i. www.theelectricdrive.com